Wireless System

Compact Remote

CE RoHS

Compact **Lightweight**

Area Approx. **61% reduction**[*1]

59.8 cm² ⬅ 155 cm²

Volume Approx. **86% reduction**[*1]

159 cm³ ⬅ 1,139 cm³

Weight Approx. **87% reduction**[*1]

130 g ⬅ 965 g

*1 For the e-CON type
Compared with the existing remote, M8 connector/ digital 8 inputs specification

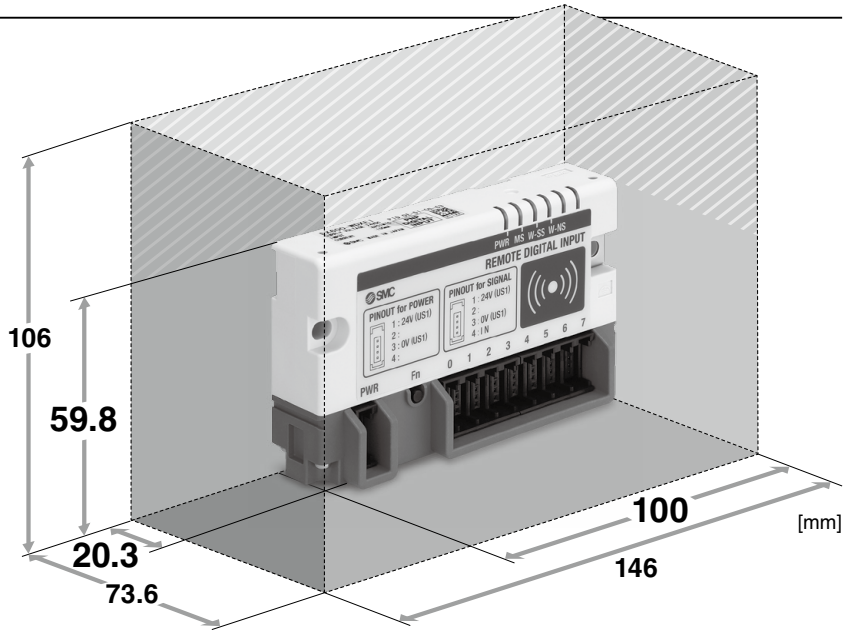

Variations

Grommet type IP67

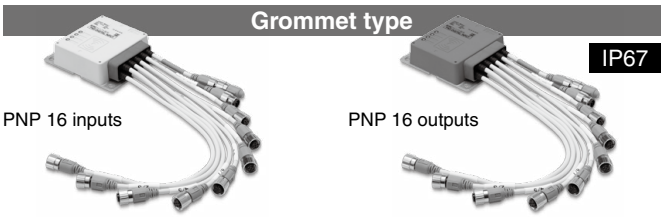

IO-Link device compatible IP67

Input type
- SIO mode*1
  PNP 8 inputs
- IO-Link mode
  4 port

Output type
- SIO mode*2
  PNP 4 inputs
  PNP 4 outputs
- IO-Link mode
  4 port

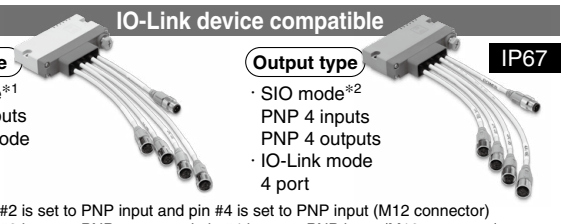

*1 When pin #2 is set to PNP input and pin #4 is set to PNP input (M12 connector)
*2 When pin #2 is set to PNP output and pin #4 is set to PNP input (M12 connector)

Applicable to existing wireless systems

Base side

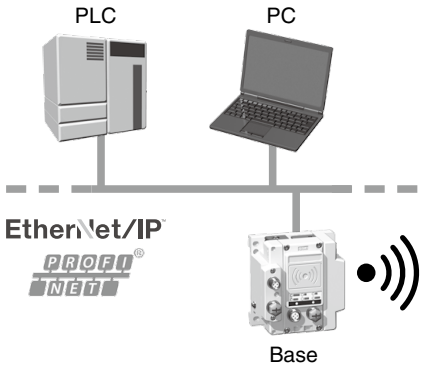

Trademark
EtherNet/IP™ is a trademark of ODVA.

Remote side

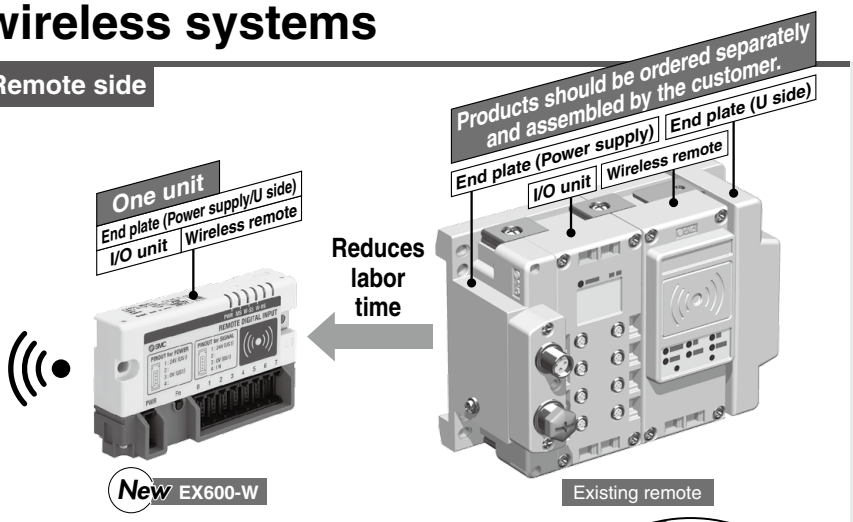

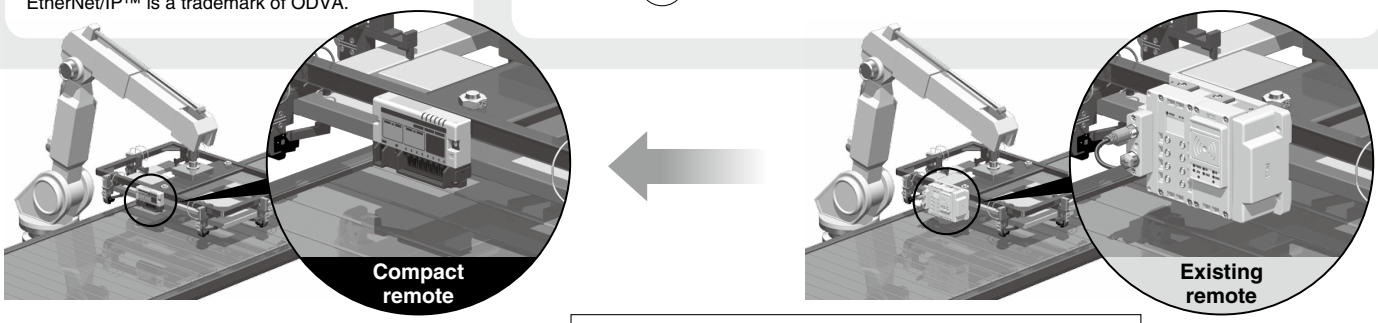

EX600-W Series

Countries/Regions in which wireless is supported
This product cannot be used in countries where wireless is not supported. Refer to the back cover for details on countries in which the product can be used.

SMC

Specifications

Wireless Communication Specifications

Protocol	SMC original protocol
Radio wave type	Frequency Hopping Spread Spectrum (FHSS)
Frequency	2.4 GHz (2403 to 2481 MHz)
Number of frequency channels	79 ch (Bandwidth: 1.0 MHz)
Communication speed	250 kbps
Communication distance	10 m (Depending on the operating environment)
Radio Law certificate	Refer to page 8

IO-Link Communication Specifications*1

Communication speed	COM1 (4.8 kBaud) COM2 (38.4 kBaud) COM3 (230.4 kBaud) Automatically switched according to the device to be connected
Ports for IO-Link devices	4*2

*1 Parameter setting for IO-Link devices is not supported. Set using the dedicated tool before connecting the product.
*2 Only process data can be sent and received.

General Specifications

Type		e-CON type		Grommet type		IO-Link device compatible	
		PNP input **EX600-WDXE1**	PNP output **EX600-WDYE1**	PNP input **EX600-WDXA1**	PNP output **EX600-WDYA1**	PNP input **EX600-WLXB1**	PNP output **EX600-WLYB1**
Power supply for control and input (US1)	**Power supply voltage**	24 VDC ±10%					
	Current consumption*1	100 mA or less	50 mA or less	100 mA or less	50 mA or less	100 mA or less	100 mA or less
Power supply for output (US2)	**Power supply voltage**	—	24 VDC ±10%	—	24 VDC ±10%	—	24 VDC ±10%
	Max. load current (per unit)		800 mA		2 A*2		2 A*2
	Max. load current (per output)		100 mA (per output)		100 mA (per output)		100 mA (per output)
Electrical specifications (Common)	**Number of points**	8 inputs (1 input/connector)	8 outputs (1 output/connector)	16 inputs (2 inputs/connector)	16 outputs (2 outputs/connector)	8 inputs (2 inputs/connector)*3	4 outputs (1 output/connector)*3
	Type	PNP (-COM)					
	Connector type	e-CON (4-pin)		M12 5-pin socket (Female)			
	Max. sensor supply current	2 A/unit, 0.3 A/connector		2 A/unit, 0.3 A/connector		1 A/unit, 0.3 A/connector	
Input	**Input resistance**	1.5 kΩ	—	1.5 kΩ	—	—	—
	Rated input current	5 mA or less		5 mA or less		2.5 mA or less (Pin #2) 5.5 mA or less (Pin #4)	5.5 mA or less (Pin #4)
	Signal OFF-judgement	5 VDC/2 mA or less		5 VDC/2 mA or less		5 VDC/2 mA or less	—
	Signal ON-judgement	15 VDC/5 mA or more		15 VDC/5 mA or more		15 VDC/5 mA or more	—
	Protection	Short-circuit protection		Short-circuit protection		Short-circuit protection	
Output	**Max. load current**	—	100 mA (per output)	—	100 mA (per output)	—	100 mA (per output)
	Protection	—	Short-circuit protection	—	Short-circuit protection	—	Short-circuit protection
Cable tensile strength		10 N		100 N			
Operating ambient temperature		0 to +50°C					
Storage ambient temperature		–10 to +60°C					
Ambient humidity		35 to 85%RH					
Withstand voltage		10 MΩ or more (500 VDC between external terminals and metallic parts)					
Insulation resistance		500 VAC for 1 minute between external terminals and metallic parts					
Vibration resistance		Compliant with EN61131-2, 5 ≤ f < 8.4 Hz 3.5 mm, 8.4 ≤ f < 150 Hz 9.8 m/s^2					
Impact resistance		Compliant with EN61131-2, 147 m/s^2, 11 ms					
Enclosure		IP20		IP67			
Mounting		M4 screw through hole 2 locations		M5 screw through hole 4 locations		M4 screw through hole 2 locations	
Weight		130 g		480 g		230 g	

*1 When an external device is not connected (Body only)
*2 (Per unit) See the output specifications for the load current for each signal.
*3 Max. number of points when set to SIO-mode
* Number of connections when the setting enabling IO-Link devices is selected

Wireless remote/ Input

Wireless remote/ Output

Dimensions

e-CON Type

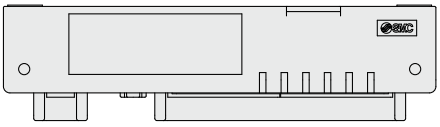

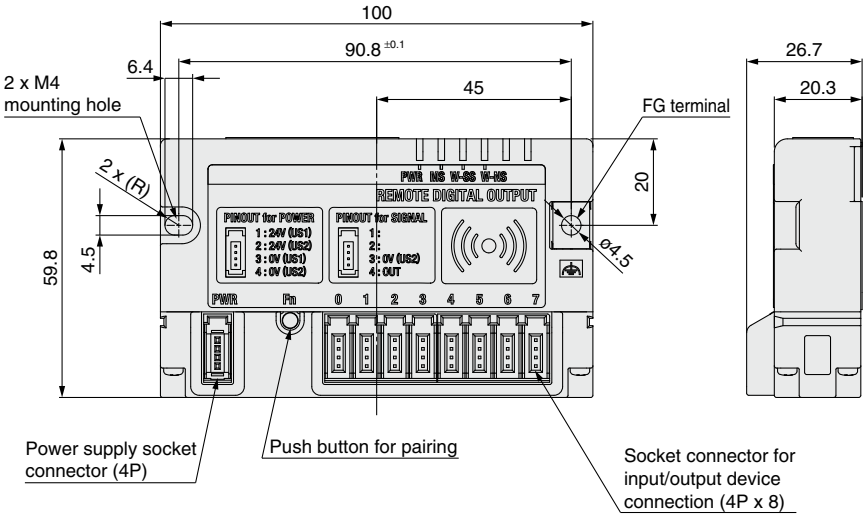

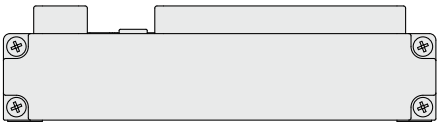

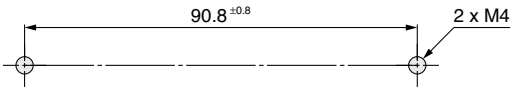

Recommended screw tightening torque:
1.35 to 1.65 N·m

Recommended mounting thread hole dimension

Applicable Connectors for Connection

Part no.	AWG No.	Conductor area [mm SQ]	Finished outside diameter [mm]	Cover color
ZS-28-C-1	24 to 26	0.14 to 0.2	ø1.0 to ø1.2	Yellow
ZS-28-C-2			ø1.2 to ø1.6	Orange
ZS-28-C-3	22 to 20	0.3 to 0.5	ø1.0 to ø1.2	Green
ZS-28-C-4			ø1.2 to ø1.6	Blue
ZS-28-C-5			ø1.6 to ø2.0	Gray
ZS-28-CA-1	—	0.1 to 0.5	ø0.6 to ø0.9	Orange
ZS-28-CA-2			ø0.9 to ø1.0	Red
ZS-28-CA-3			ø1.0 to ø1.15	Yellow
ZS-28-CA-4			ø1.15 to ø1.35	Blue
ZS-28-CA-5			ø1.35 to ø1.6	Green

e-CON Type/Connector Specifications (Input/Output)

Input

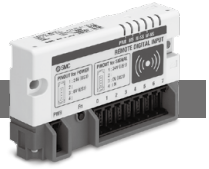

Wireless remote/Input

Power supply socket connector wiring specifications

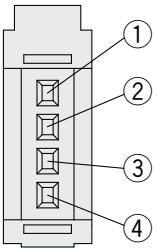

Pin no.	Terminal name
1	24 V (For control/input)
2	N.C.
3	0 V (For control/input)
4	N.C.

Socket connector for input device connection wiring specifications

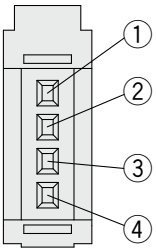

Pin no.	Terminal name
1	24 V (For control/input)
2	N.C.
3	0 V (For control/input)
4	IN

Socket for input device connection x 8 (0 to 7)

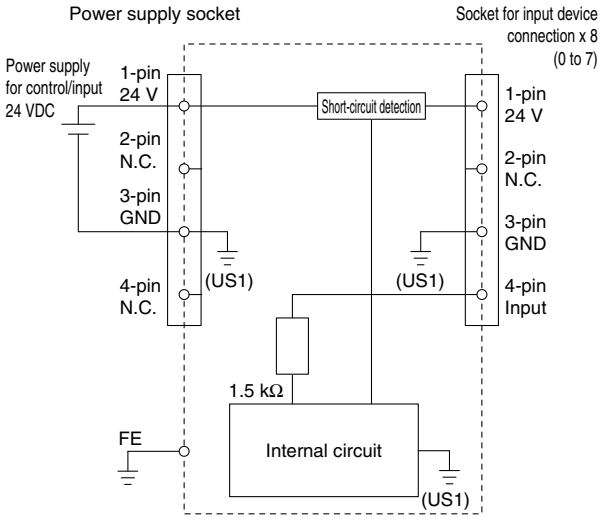

Output

Wireless remote/Output

Power supply socket connector wiring specifications

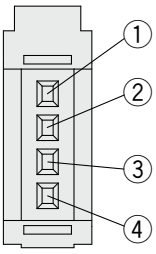

Pin no.	Terminal name
1	24 V (For control/input)
2	24 V (For output)
3	0 V (For control/input)
4	0 V (For output)

Socket connector for output device connection wiring specifications

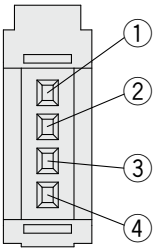

Pin no.	Terminal name
1	N.C.
2	N.C.
3	0 V (For output)
4	OUT

Socket for output device connection x 8 (0 to 7)

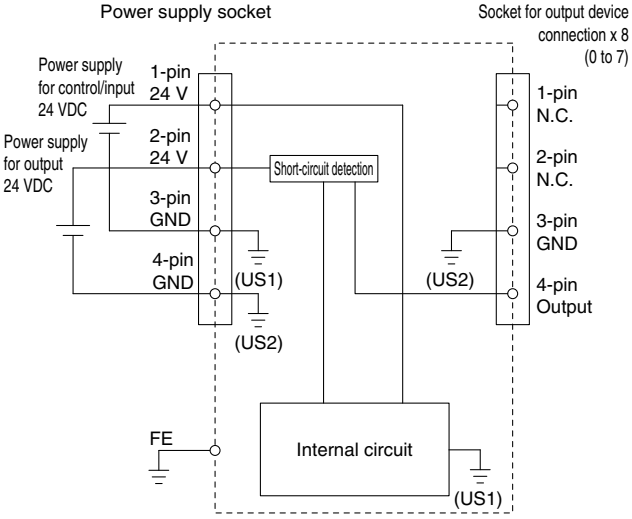

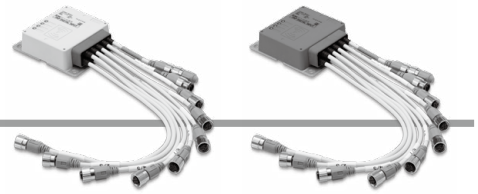

PNP 16 inputs PNP 16 outputs

Dimensions

Grommet Type

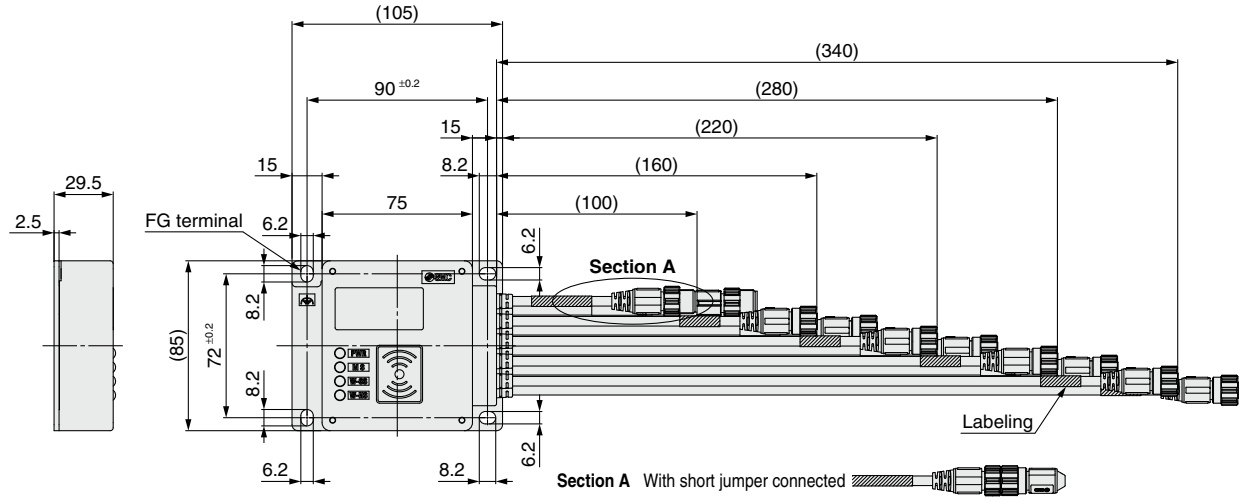

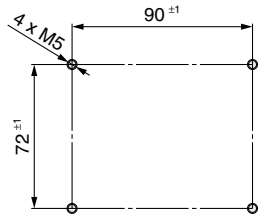

Recommended screw tightening torque: 2.7 to 3.3 N·m

Recommended mounting thread hole dimensions

Grommet Type/Connector Specifications (Input/Output)

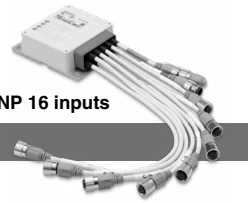

PNP 16 inputs

Input

Connector Arrangement Specifications

No.	Description	Cable length [mm]	Labeling	Cable with M12 connector
0	Pairing line	100	PAIRING	M12, 4-pin, plug (Male)
1	Power supply line	130	POWER	
2	Input E/F	160	E/F	M12, 5-pin, socket (Female)
3	Input C/D	190	C/D	
4	Input A/B	220	A/B	
5	Input 8/9	250	8/9	
6	Input 6/7	280	6/7	
7	Input 4/5	310	4/5	
8	Input 2/3	340	2/3	
9	Input 0/1	370	0/1	

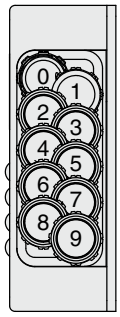

Connector Specifications

Labeling	PAIRING	POWER	0/1 to E/F	M12, 4-pin plug	M12, 5-pin socket
Pin no.	Description				
1	Short jumper Connected: Normal mode (3-pin to 4-pin short) Not connected: Pairing mode	Power supply for control: + (COM)	Power supply for control: + (COM)		
2		N.C.	Input n + 1		
3		Power supply for control: – (COM)	Power supply for control: – (COM)		
4		N.C.	Input n		
5	—	—	N.C.		

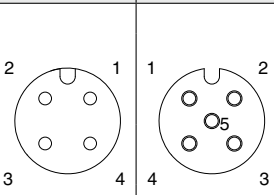

Input cable x 8 (0 to F)

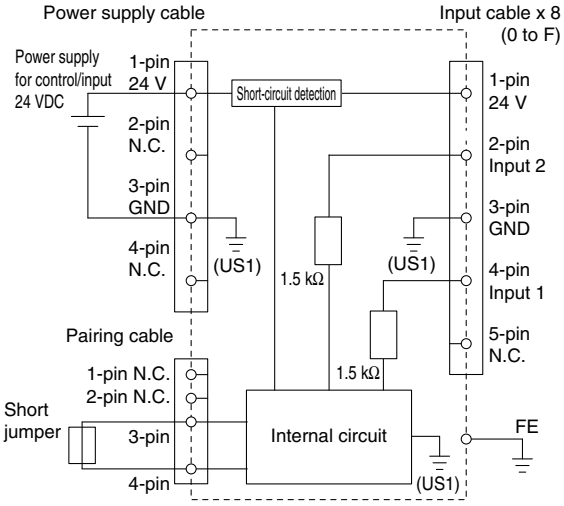

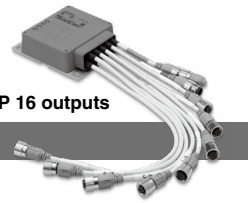

PNP 16 outputs

Output

Connector Arrangement Specifications

No.	Description	Cable length [mm]	Labeling	Cable with M12 connector
0	Pairing line	100	PAIRING	M12, 4-pin, plug (Male)
1	Power supply line	130	POWER	
2	Output E/F	160	E/F	M12, 5-pin, socket (Female)
3	Output C/D	190	C/D	
4	Output A/B	220	A/B	
5	Output 8/9	250	8/9	
6	Output 6/7	280	6/7	
7	Output 4/5	310	4/5	
8	Output 2/3	340	2/3	
9	Output 0/1	370	0/1	

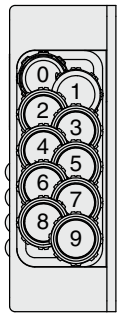

Connector Specifications

Labeling	PAIRING	POWER	0/1 to E/F	M12, 4-pin plug	M12, 5-pin socket
Pin no.	Description				
1	Short jumper Connected: Normal mode (3-pin to 4-pin short) Not connected: Pairing mode	Power supply for control: + (COM)	N.C.		
2		Power supply for output: + (COM)	Output n + 1		
3		Power supply for control: – (COM)	Power supply for output: – (COM)		
4		Power supply for output: – (COM)	Output n		
5	—	—	N.C.		

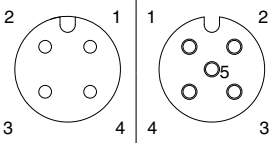

Output cable x 8 (0 to F)

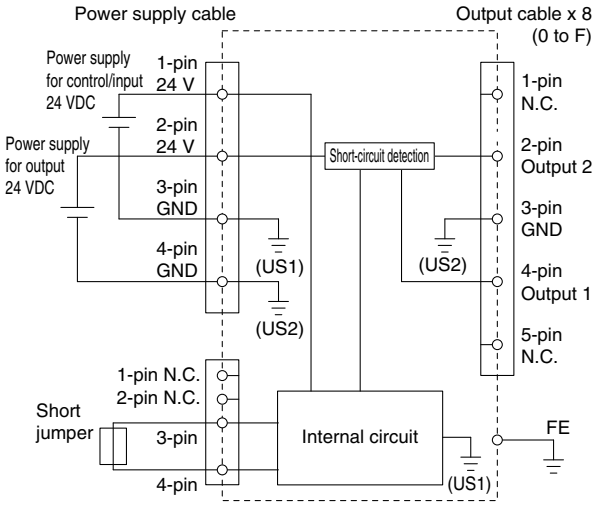

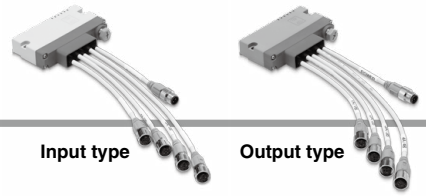

Dimensions

Grommet Type for IO-Link Device

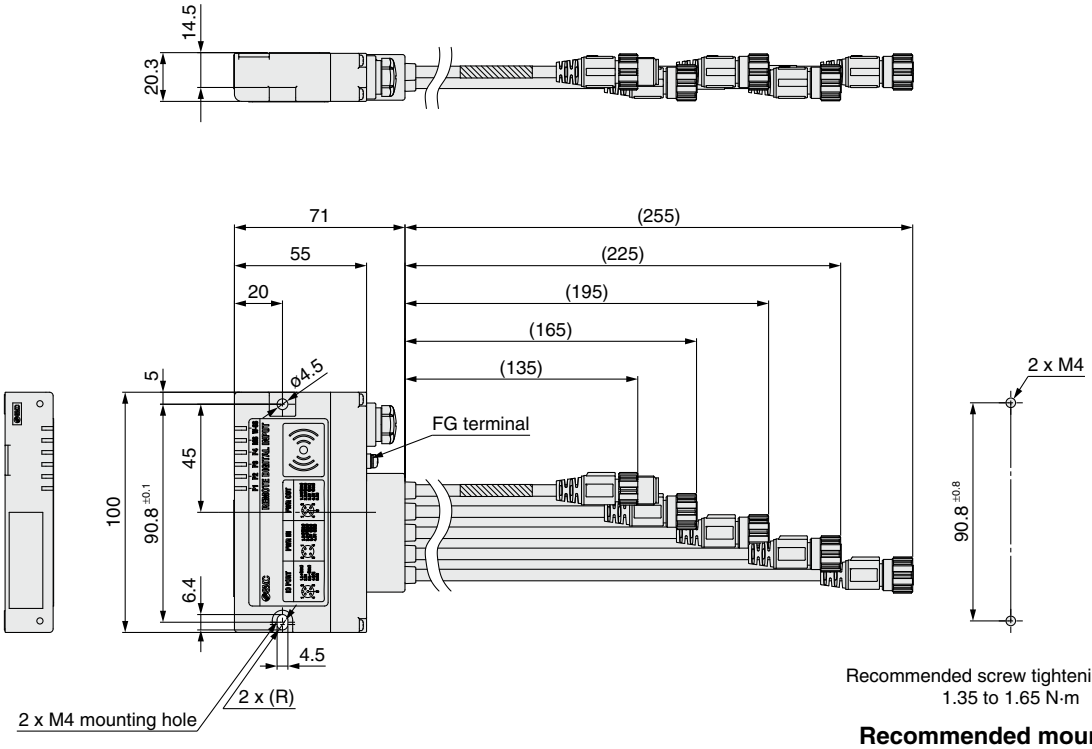

Recommended screw tightening torque:
1.35 to 1.65 N·m

Recommended mounting thread hole dimensions

Grommet Type for IO-Link Device/Connector Specifications

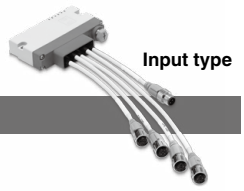

Input

Connector Arrangement Specifications

No.	Description	Cable length [mm]	Labeling	Type
1	PORT1	255	—	M12, 5-pin, socket, A-coded
2	PORT2	225	—	
3	PORT3	195	—	
4	PORT4	165	—	
5	Power supply IN connector	135	POWER	M12, 4-pin, plug, A-coded
6	Power supply OUT connector	—	—	M12, 5-pin, socket, A-coded

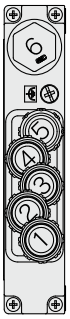

IO Connector

Pin no.	Description	M12, 5-pin, socket, A-coded
1	L+ (US1)	
2	DI (Digital input)	
3	L– (US1)	
4	CQ (IO-Link)*1	
5	Not used	

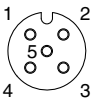

*1 Switchable to IO-Link/digital input (PNP input)

Power Supply IN Connector

Pin no.	Description	M12, 4-pin, plug, A-coded
1	24 V (US1)	
2	24 V (US2)	
3	0 V (US1)	
4	0 V (US2)	

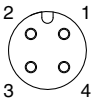

Power Supply OUT Connector

Pin no.	Description	M12, 5-pin, socket, A-coded
1	24 V (US1)	
2	24 V (US2)	
3	0 V (US1)	
4	0 V (US2)	
5	Not used	

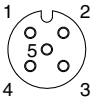

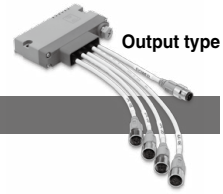

Output

Connector Arrangement Specifications

No.	Description	Cable length [mm]	Labeling	Type
1	PORT1	255	—	M12, 5-pin, socket, A-coded
2	PORT2	225	—	
3	PORT3	195	—	
4	PORT4	165	—	
5	Power supply IN connector	135	POWER	M12, 4-pin, plug, A-coded
6	Power supply OUT connector	—	—	M12, 5-pin, socket, A-coded

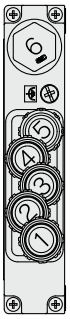

IO Connector

Pin no.	Description	M12, 5-pin, socket, A-coded
1	L+ (US1)	
2	DO (Digital output)	
3	L– (US1)	
4	CQ (IO-Link)*1	
5	0 V (US2)	

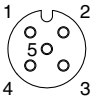

*1 Switchable to IO-Link/digital input (PNP input)

Power Supply IN Connector

Pin no.	Description	M12, 4-pin, plug, A-coded
1	24 V (US1)	
2	24 V (US2)	
3	0 V (US1)	
4	0 V (US2)	

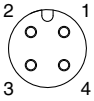

Power Supply OUT Connector

Pin no.	Description	M12, 5-pin, socket, A-coded
1	24 V (US1)	
2	24 V (US2)	
3	0 V (US1)	
4	0 V (US2)	
5	Not used	

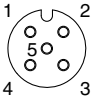

Important

⚠Warning

- The product is certified as a wireless equipment in accordance with the Radio Act and the Japanese radio law has been obtained. Customers do not need to apply for a license to use this equipment.
  Be sure to comply with the following precautions.
  - Do not disassemble or modify the product. Disassembly and modification are prohibited by law.
  - This product is for use in Japan, European countries (Austria, Belgium, Bulgaria, Croatia, Czech Republic, Denmark, Estonia, Finland, France, Germany, Greece, Hungary, Ireland, Italy, Latvia, Lithuania, Netherlands, Norway, Poland, Portugal, Romania, Slovakia, Slovenia, Spain, Sweden, Switzerland, U.K., Turkey), the U.S. and Canada. For use in other countries, please contact SMC.
- This product communicates by radio waves, and the communication may stop instantaneously due to ambient environments and operating methods. SMC will not be responsible for any secondary failure which may cause personal injury, or damage to other devices or equipment.
- When several units are installed closely to each other, slight interference may occur due to the characteristics of the wireless product.
- The electromagnetic waves emitted from this product may interfere with implantable medical devices such as cardiac pacemakers and cardioverter defibrillators, resulting in the malfunction of the medical device or other adverse effects.
  Please use extreme caution when operating equipment which may have an adverse effect on your implantable medical device. Be sure to thoroughly read the precautions stated in the catalog, operation manual, etc., of your implantable medical device, or contact the manufacturer directly for further details on what types of equipment need to be avoided.
- The communication performance is affected by the ambient environment, so please perform the communication testing before use.

∗ As of end of September, 2020

⚠ **Safety Instructions**	Be sure to read the “Handling Precautions for SMC Products” (M-E03-3) and “Operation Manual” before use.

SMC Corporation

Akihabara UDX 15F,
4-14-1, Sotokanda, Chiyoda-ku, Tokyo 101-0021, JAPAN
Phone: 03-5207-8249 Fax: 03-5298-5362
https://www.smcworld.com